DH-SG4028LP

28-Port Cloud Managed Desktop Gigabit Switch with 24-Port PoE

PoE2.0

- 24 × RJ45 Gigabit PoE ports, 2 × RJ45 Gigabit ports, 2 × SFP Gigabit ports.
- 240 W total PoE budget, 802.3af/at on all PoE ports, additional 802.3 bt on red ports.
- Wide operating temperature ranging from –10 °C to 55 °C.
- Supports VLAN, STP, RSTP and link aggregation.
- WEB-managed and centralized cloud management through the DoLynk App and performs real-time monitoring of the network.
- Easy config to auto detect and set up network.

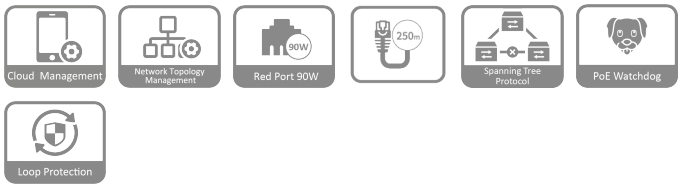

Series Overview

Highly intuitive, the Cloud Managed Switch can manage local networks. With the DoLynk Care platform, it can also perform cloud management. The switch performs operation and maintenance using topology visualization on front-end, transmission and back-end storage devices that are in the security system and IT system. With its full metal design, the switch has great heat dissipation and can operate in temperatures ranging -10°C to 55°C(+14°F to +131°F). It offers EMC and has protection against overvoltage, overcurrent, static electricity, lightning strikes, pulses and other types of interference. For the PoE series Smart Managed Switch, power is supplied up to 250 meters away. The orange port supplies up to 60 W and the red port provides up to 90 W. Also, link aggregation and STP are available on select models to ensure the network remains stable. The switch can be used in small and medium-sized businesses such as supermarkets, offices, restaurants, cafés and hotels.

Functions

Cloud Management

Devices can be managed through the DoLynk Care app and performs real-time monitoring of the network. The app also displays the status of devices, triggers alarms for errors in real time and sends notifications.

Network Topology Management

Supports the LLDP protocol and is able to generate and display the network topology, so that you can quickly identify issues, and perform operation and maintenance remotely on devices that are in the topology.

BT 90W (Red Port)

The red ports support IEEE802.3af, IEEE802.3at, IEEE802.3bt and Hi-PoE standards, with a maximum output power consumption of 90W per port. Suitable for powering high-power devices.

Long Distance PoE

The transmission distance of a PoE port can be up to 250 m, meeting the requirement of wired transmission (bandwidth reduced to 10 Mbps).

Spanning Tree Protocol (STP)

Uses algorithms that calculate the best loop-free path through a Layer 2 network while providing path redundancy to prevent the occurrence of broadcast storms and enhance the stability of operations and services.

PoE Watchdog

Adopts the innovative PoE Watchdog. It enables the switch to automatically detect port status and restart the failed ports to recover connection in case of IPC connection exception. This enables intelligent operation and maintenance management in its true sense and effectively reduces manual maintenance costs.

Scene

Suitable for scenes such as houses, factories and offices.

Technical Specification

Basic

Layer	Layer 2
Switching Capacity	56 Gbps
Packet Forwarding Rate	41.66 Mpps
Description of Function Slots	Port 1-24: 24 × RJ45 10/100/1000 Mbps (PoE); Port 25-26: 2 × RJ45 10/100/1000 Mbps (uplink); Port 27-28: 2 × SFP 1000 Mbps (uplink)
Operating Temperature	–10 °C to +55 °C (+14 °F to +131 °F)
Operating Humidity	5%–95% (RH), non-condensing
Storage Temperature	–40 °C to +70 °C (–40 °F to +158 °F)
Storage Humidity	5%–95% (RH), non-condensing
Power Supply	Built-in power supply: 100–240 VAC, 47–63 Hz, max 4A
Power Consumption	Idling: ≤8.3 W Full load: 265 W
Statics Protection	Air discharge: 8 kV; Contact discharge: 6 kV
Lightning Protection	Common mode: 4 kV Differential mode: 2 kV
Net Weight	2.50 kg (5.5 lb)
Gross Weight	3.15 kg (6.93 lb)
Product Dimensions	440 mm × 220 mm × 44 mm (17.32" × 8.66" × 1.73") (L × W × H)
Packaging Dimensions	540 mm × 342 mm × 90 mm (21.26" × 13.46" × 3.54") (L × W × H)
Casing Material	Sheet metal
Installation	Desktop mount; rack mount

PoE

PoE	Yes
PoE Power	Port 1-2 ≤ 90 W, Port 3-24 ≤ 30 W, total ≤ 240 W
PoE Protocol	IEEE802.3af; IEEE802.3at; Hi-PoE; IEEE802.3bt
PoE Power Consumption Management	PoE power consumption management; PoE power on/off; turns off PoE if overload is detected
PoE Pin Assignment	1,2,4,5（V+）,3,6,7,8（V-）
Long Distance PoE Transmission	Yes

Hardware

Reset Button	1

Performance

MTBF	67.80 years
Packet Buffer Size	4 Mbit
Jumbo Frame	15K Byte
MAC Table Size	8K
Communication Standard	IEEE 802.3 IEEE 802.3u IEEE 802.3x IEEE 802.3ab IEEE 802.3az IEEE 802.3z IEEE 802.3ad
VLAN Number	32

Feature

Ethernet Loop Protection	STP/RSTP
VLAN Function	IEEE 802.1Q VLAN
Link Aggregation	Static Aggregation
Port Feature	IEEE 802.3x Flow Control Unknown Unicast Suppression Multicast Storm Control Broadcast Storm Control MAC+Port Binding Loop Prevention
Mirror	N:1 Mirroring Local Port Mirroring
Reliability	LLDP
DHCP Function	DHCP Client
Security	Port Isolation
Equipment Management	Web Management Cloud Management Logs Fault Alarm

General

Packing List	1 × Quick Start Guide 1 × Legal and Regulatory Information 1 × Power Cord 1 × Rack-mounting Kit

Transmission Performance

Switch power supply voltage 54V.
CAT6. Max. DC resistance < 8 Ω/100 m

Cable(m)	Load Capacity(W)	Bandwidth(Mbps)
IEEE802.3bt 90W		
100	71.3	1000
150	62	10
200	51	10
250	40	10
Hi-PoE 60W		
100	46	1000
150	42	10
200	37	10
250	32	10
IEEE802.3at 30W		
100	25.5	1000
150	25.5	10
200	25.5	10

250	24	10

Note: Data from this table was collected by Dahua test lab and is for reference only. The actual transmission distance may vary due to power consumption of connected devices or the cable type and status.

Ordering Information

Type	Model	Description
PoE Switch	DH-SG4028LP	28-Port Cloud Managed Desktop Gigabit Switch with 24-Port PoE

Installation

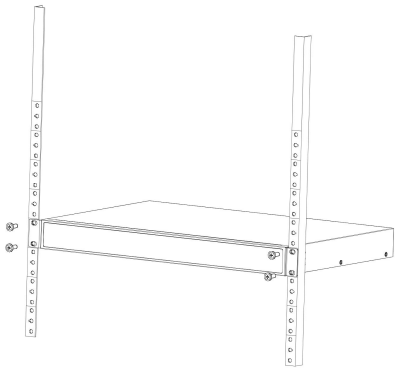

Dimensions (mm[inch])

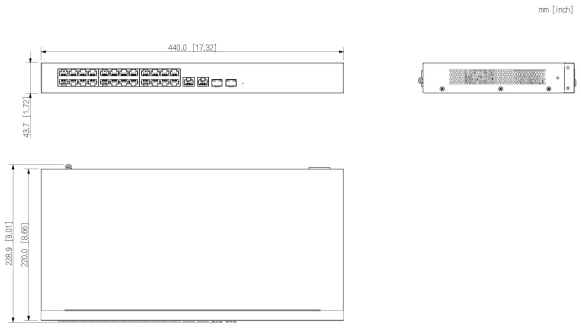

Panels

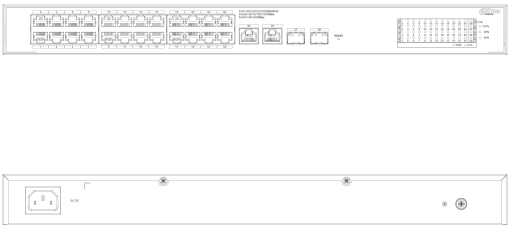

Rev 002.000 © 2025 Dahua. All rights reserved. Design and specificatons are subject to change without notce.
Pictures in the document are for reference only, and the actual product shall prevail.